CONCESIONARIO OFICIAL SANTANA

SUZUKI - 27102-67D01-000 - CONJ. EJE, PROPULSOR DELANTERO

Conjunto eje propulsor delantero

SHAFT ASSY, PROPELLER REAR
ENSEMBLE ARBRE, ARRIÈRE D'HÉLICE
GRUPPO ALBERO, ELICA POSTERIORE
WELLE BAUGRUPPE, PROPELLER HINTEN

Vehiculo Código de modelo ??dificación
Grand Vitara SQ625 SQ625 (E28,E33,E60:MY 2000) 00 MODEL
Grand Vitara SQ420 SQ420W-2 SQ420W
Grand Vitara SQ420 SQ420WD-3 SQ420WD
Grand Vitara SQ625 SQ625 (E28,E33,E60:MY 2002) 02 MODEL
Grand Vitara SQ625 SQ625W-2 (G.Vitara) SQ625W
Grand Vitara SQ625 SQ625 (E28,E33,E60:MY 1999) 99 MODEL
Grand Vitara SQ625 SQ625 (E28,E33:MY 2004) 04 MODEL
Grand Vitara SQ625 SQ625 (E28,E33:MY 2005) 05 MODEL
Grand Vitara SQ625 SQ625W-3 (G.Vitara) SQ625W
Grand Vitara SQ420 SQ420WD-2 SQ420WD
Grand Vitara SQ625 SQ625 (E28,E33,E60:MY 2001) 01 MODEL
Grand Vitara SQ625 SQ625 (E28,E33,E60:MY 2003) 03 MODEL
Grand Vitara SQ420 SQ420W-3 SQ420W
Vitara/Sidekick SQ625 SQ625L (Vitara)

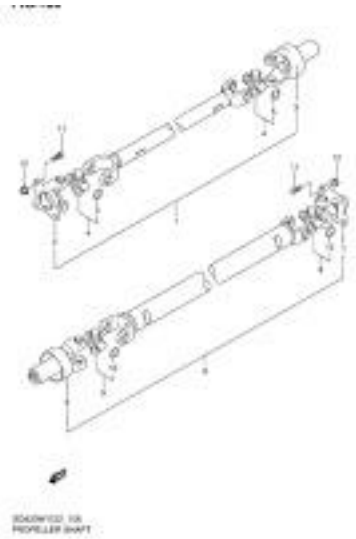

[illegible]
PROPELLER SHAFT