CONCESIONARIO OFICIAL SANTANA

SANTANA - 12160-71C00 - CONJUNTO BIELA VIT/SANT-GAS

Conjunto biela

CONNECTING ROD ASSY
BIELLE ENSEMBLE

Vehiculo Códigos de modelo Código de modelo Fecha del modelo desde spec
Baleno/Esteem SY416 SY416-7 SY416
Baleno/Esteem SY416 SY416-3 SY416 TYPE 3
Vitara/Sidekick SE416 SE416 (E03,E33:MY 1991) 91 MODEL
Grand Vitara SQ416 SQ416L SQ416L
Vitara/Sidekick SE416 SE416 (E03,E33:MY 1993) 93 MODEL
Vitara/Sidekick SE416 SE416-5 TYPE 5
Swift SF416 SF416-4 (Magyar) SF416
Vitara/Sidekick SE416 SE416 (3DR) TYPE 1
Swift SF416 SF416-2 (E24) TYPE 2
Baleno/Esteem SY416 SY416 (E03,E28,E33,E60:MY 1996) 96 MODEL
Vitara/Sidekick SE416 SE416 (E03,E33:MY 1995) 95 MODEL
Vitara/Sidekick SE416 SE416-4 TYPE 4
Grand Vitara SQ420 SQ420X-3
Baleno/Esteem SY416 SY416-4 SY416 TYPE 4
Vitara/Sidekick SE416 SE416 (E03,E33:MY 1994) 94 MODEL
Vitara/Sidekick SE416 SE416-3 (5DR) TYPE 3
Baleno/Esteem SY416 SY416 (E03,E28,E33,E60:MY 1995) 95 MODEL
Vitara/Sidekick SE416 SE416 (E24) TYPE 1
Vitara/Sidekick SE416 SE416-2 (E24) TYPE 2
Swift SF416 SF416-3 (Magyar) SF416
Vitara/Sidekick SE416 SE416 (E03,E28,E33,E60:MY 1998) 98 MODEL SE416
Vitara/Sidekick SE416 SE416-2 (5DR) TYPE 2
Grand Vitara SQ416 SQ416X-2 SQ416X
Vitara/Sidekick SE416 SE416 (E03,E28,E33,E60:MY 1997) 97 MODEL SE416
Vitara/Sidekick SE416 SE416-2 (Santana) TYPE 2
Baleno/Esteem SY416 SY416-2 SY416
Vitara/Sidekick SE416 SE416 (E03,E28,E33,E60:MY 1996) 96 MODEL SE416
Grand Vitara SQ416 SQ416Q (MY:99-00,CAMI) SQ416Q
Grand Vitara SQ416 SQ416V-2 SQ416V
Baleno/Esteem SY416 SY416-5 SY416 TYPE 5

Swift SF416 SF416-2 (E01) TYPE 2
Vitara/Sidekick SE416 SE416 (E03,E33:MY 1992) 92 MODEL
Swift SF416 SF416-2 (Magyar) SF416
Vitara/Sidekick SE416 SE416-3 (3DR) TYPE 3
Grand Vitara SQ416 SQ416L-3
Grand Vitara SQ420 SQ420XD-3
Vitara/Sidekick SE416 SE416 (E28:MY 1994) 94 MODEL
Vitara/Sidekick SE416 SE416 (MY:~95, Santana)
Swift SF416 SF416 (E01) TYPE 1
Swift SF416 SF416 (E24) TYPE 1
Swift SF416 SF416 (E28:MY 1992) 92 MODEL
Swift SF416 SF416 (E28:MY 1994) 94 MODEL
Baleno/Esteem SY416 SY416 (E03,E28,E33,E60:MY 2000) 00 MODEL SY416
Vitara/Sidekick SE416 SE416-3 (Santana) TYPE 3
X90 SZ416 SZ416 (E30,E28,E33:MY 1998) 98 MODEL
Vitara/Sidekick SE416 SE416 (E28:MY 1995) 95 MODEL
Grand Vitara SQ416 SQ416X-3
Vitara/Sidekick SE416 SE416 (E28:MY 1992) 92 MODEL
Grand Vitara SQ416 SQ416L-2
Baleno/Esteem SY416 SY416 (E03,E28,E33,E60:MY 1998)
Baleno/Esteem SY416 SY416 (E03,E28,E33,E60:MY 2001) 01 MODEL SY416
X90 SZ416 SZ416 (E01,E02,E22,E24,E43)
Vitara/Sidekick SE416 SE416 (Santana) TYPE 1
Vitara/Sidekick SE416 SE416-2 (3DR) TYPE 2
Vitara/Sidekick SE416 SE416-3 (E24) TYPE 3
Grand Vitara SQ416 SQ416V SQ416V
Grand Vitara SQ416 SQ416V-3
Vitara/Sidekick SE416 SE416 (E28:MY 1989) 89 MODEL
Swift SF416 SF416 (E28:MY 1993) 93 MODEL
Baleno/Esteem SY415 SY415 (E01) SY415
Baleno/Esteem SY416 SY416 (E03,E28,E33,E60:MY 1999) 99 MODEL SY416
Vitara/Sidekick SE416 SE416 (E28:MY 1991) 91 MODEL
Vitara/Sidekick SE416 SE416 (E28:MY 1993) 93 MODEL
Grand Vitara SQ416 SQ416Q (MY:01-04,CAMI) SQ416Q
Baleno/Esteem SY416 SY416 (E01) SY416
Vitara/Sidekick SE416 SE416 (E28:MY 1990) 90 MODEL
Swift SF416 SF416 (Magyar) SF416
Vitara/Sidekick SE416 SE416 (E03,E33:MY 1989) 89 MODEL
Vitara/Sidekick SE416 SE416 (E03,E33:MY 1990) 90 MODEL
Baleno/Esteem SY416 SY416 (E03,E28,E33,E60:MY 2002) 02 MODEL SY416
Baleno/Esteem SY416 SY416 (E03,E28,E33,E60:MY 1997) 97 MODEL
X90 SZ416 SZ416 (E30,E28,E33:MY 1996) 96 MODEL
X90 SZ416 SZ416 (E30,E28,E33:MY 1997) 97 MODEL
Vitara/Sidekick SQ416 SQ416Q (E03,E28,E33:MY 1999) 99 MODEL SQ416Q
Vitara/Sidekick SQ416 SQ416Q (E03,E28,E33:MY 2000) 00 MODEL SQ416Q
Vitara/Sidekick SQ416 SQ416Q (E03,E28,E33:MY 2001) 01 MODEL SQ416Q
Vitara/Sidekick SQ416 SQ416Q (E03,E28,E33:MY 2002) 02 MODEL SQ416Q
Vitara/Sidekick SQ416 SQ416Q (E03,E28,E33:MY 2003) 03 MODEL SQ416Q

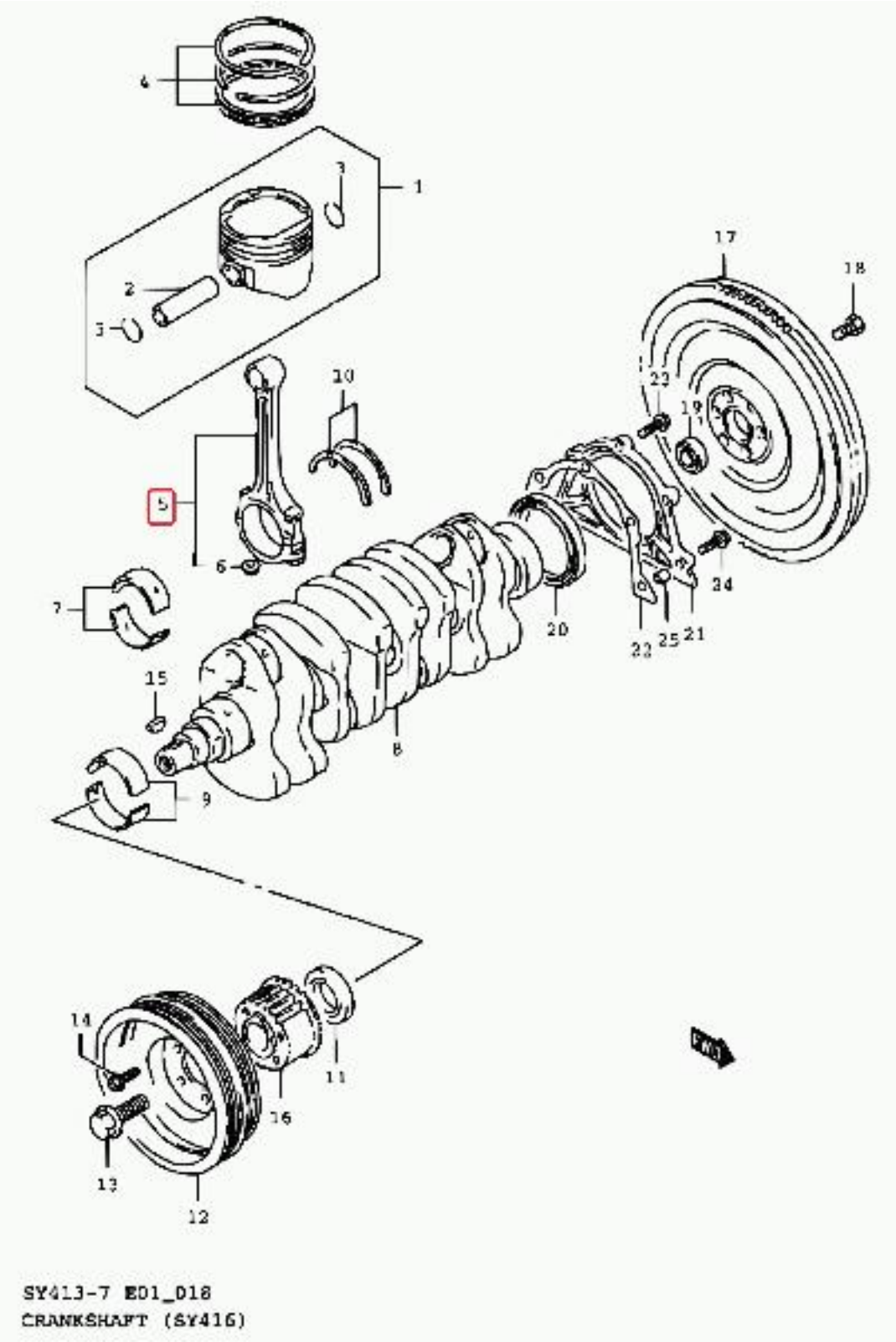

SY413-7 E01_D18
CRANKSHAFT (SY416)