CONCESIONARIO OFICIAL SANTANA

## SANTANA - 28196-84A00 - CASQUILLO

Casquillo

BUSH
BUISSON

Vehículo Códigos de modelo Código de modelo
Jimny SN413 SN413Q-4 (SANTANA) SN413Q
Jimny SN413 SN413V-7 (E02,E05,E10,E11,E21,E22,E24,E37,E38,E42,E43,E54,E85,E90,E96) SN413V TYPE 7 PETROL
Jimny SN415 SN415QD (SANTANA) DIESEL
Jimny SN415 SN415VD-4 DIESEL SN415VD TYPE 4
Jimny SN413 SN413V-7 (E06) PETROL
Jimny SN413 SN413V-5 SN413V TYPE 5 PETROL
Jimny SN413 SN413V-6 (E02,E05,E10,E11,E21,E22,E24,E37,E38,E42,E43,E54,E85,E90,E96) SN413V TYPE 6 PETROL
Jimny SN413 SN413V-3 (SANTANA) SN413V PETROL
Jimny SN413 SN413V-6 (E50) TYPE 6 PETROL
Jimny SN413 SN413V-4 (SANTANA) SN413V PETROL
Jimny SN413 SN413Q-3 (SANTANA) SN413Q
Jimny SN413 SN413V-7 (E50) TYPE 7 PETROL
Jimny SN413 SN413V-8 (E02,E05,E10,E11,E21,E22,E24,E37,E38,E42,E43,E54,E85,E90,E96) SN413V TYPE 8 PETROL
Jimny SN413 SN413V-8 (E50) TYPE 8 PETROL
Jimny SN413 SN413Q (SANTANA) TYPE 1
Jimny SN413 SN413Q-2 (SANTANA) TYPE 2
Jimny SN413 SN413V-9 (E02,E05,E06,E21,E22,E24,E38,E42,E90) SN413V TYPE 9
Jimny SN413 SN413V-9 (E37) SN413V TYPE 9
Jimny SN413 SN413V-9 (E10,E85,E96) SN413V TYPE 9
Jimny SN413 SN413V-9 (E43) SN413V TYPE 9
Jimny SN413 SN413V-9 (E50) TYPE 9 PETROL
Jimny SN413 SN413V-9 (E85) SN413V TYPE 9

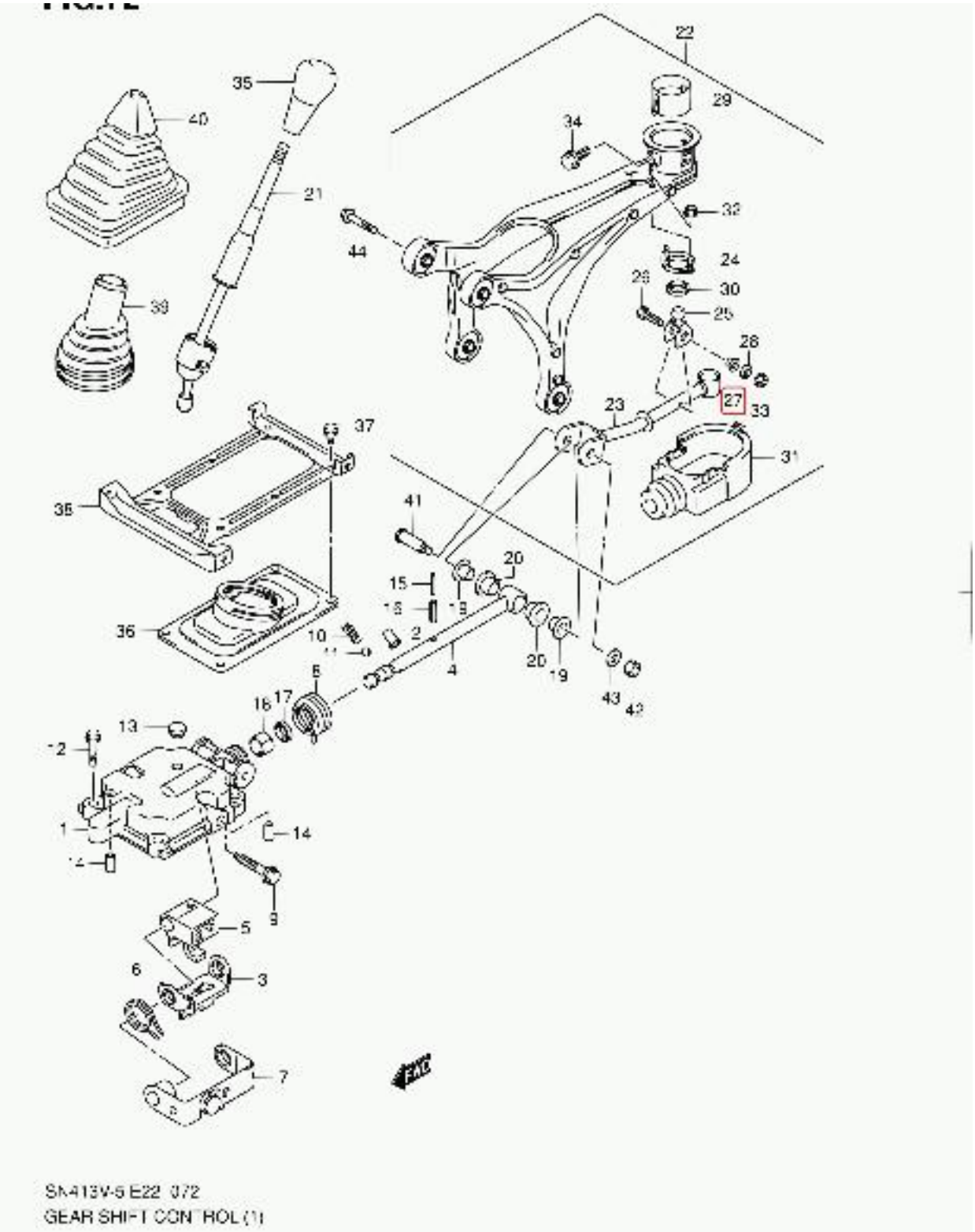


SK413V-5 E22 3/2
GEAR SHIFT CONTROL (1)