SANTANA - 33321-60A10 - TAPA DISTRIBUCION

Tapa distribuidor

CAP
BOUCHON

Vehículo Códigos de modelo Código de modelo
Samurai/SJ SJ413 SJ413V-7 (E24) TYPE 7
Carry/Supercarry/Every SK410 SK410-4
Vitara/Sidekick SE416 SE416-5 TYPE 5
Samurai/SJ SJ413 SJ413Q-4/SJ413V-4/SJ413W-4 (E01) TYPE 4
Vitara/Sidekick SE416 SE416 (3DR) TYPE 1
Samurai/SJ SJ413 SJ413 (E03,E33:MY 1988 1/2)
Samurai/SJ SJ419 SJ419 (MY:99, Santana)
Samurai/SJ SJ419 SJ419D (MY:99, Santana)
Samurai/SJ SJ419 SJ419TD (MY:99, Santana)
Vitara/Sidekick SE416 SE416-4 TYPE 4
Carry/Supercarry/Every SK410 SK410-3 (E01)
Samurai/SJ SJ413 SJ413-8 TYPE 8
Sierra MG410 MG410/MG410W
Vitara/Sidekick SE419 SE419TD (MY:97-98,Santana)
Samurai/SJ SJ413 SJ413 (E03,E33:MY 1988) 88 MODEL
Vitara/Sidekick SE416 SE416 (E24) TYPE 1
Vitara/Sidekick SE416 SE416-2 (E24) TYPE 2
Vitara/Sidekick SE416 SE416 (MY:97-98, Santana)
Samurai/SJ SJ413 SJ413-9 TYPE 9
Vitara/Sidekick SE416 SE416-2 (Santana) TYPE 2
Vitara/Sidekick SE413 SE413
Samurai/SJ SJ413 SJ413 (E03,E33:MY 1989) 89 MODEL
Samurai/SJ SJ413 SJ413Q-7 (E24) TYPE 7
Samurai/SJ SJ413 SJ413 (E03,E33:MY 1986) 86 MODEL
Vitara/Sidekick SE416 SE416-3 (Santana) TYPE 3
Samurai/SJ SJ413 SJ413 (Santana) (E01)
Samurai/SJ SJ413 SJ413Q-5/SJ413V-5 (E01) TYPE 5
Vitara/Sidekick SE416 SE416 (Santana) TYPE 1
Vitara/Sidekick SE416 SE416-3 (E24) TYPE 3
Samurai/SJ SJ413 SJ413Q-6 (E24) TYPE 6
Samurai/SJ SJ413 SJ413Q-7/SJ413V-7 (E01) TYPE 7
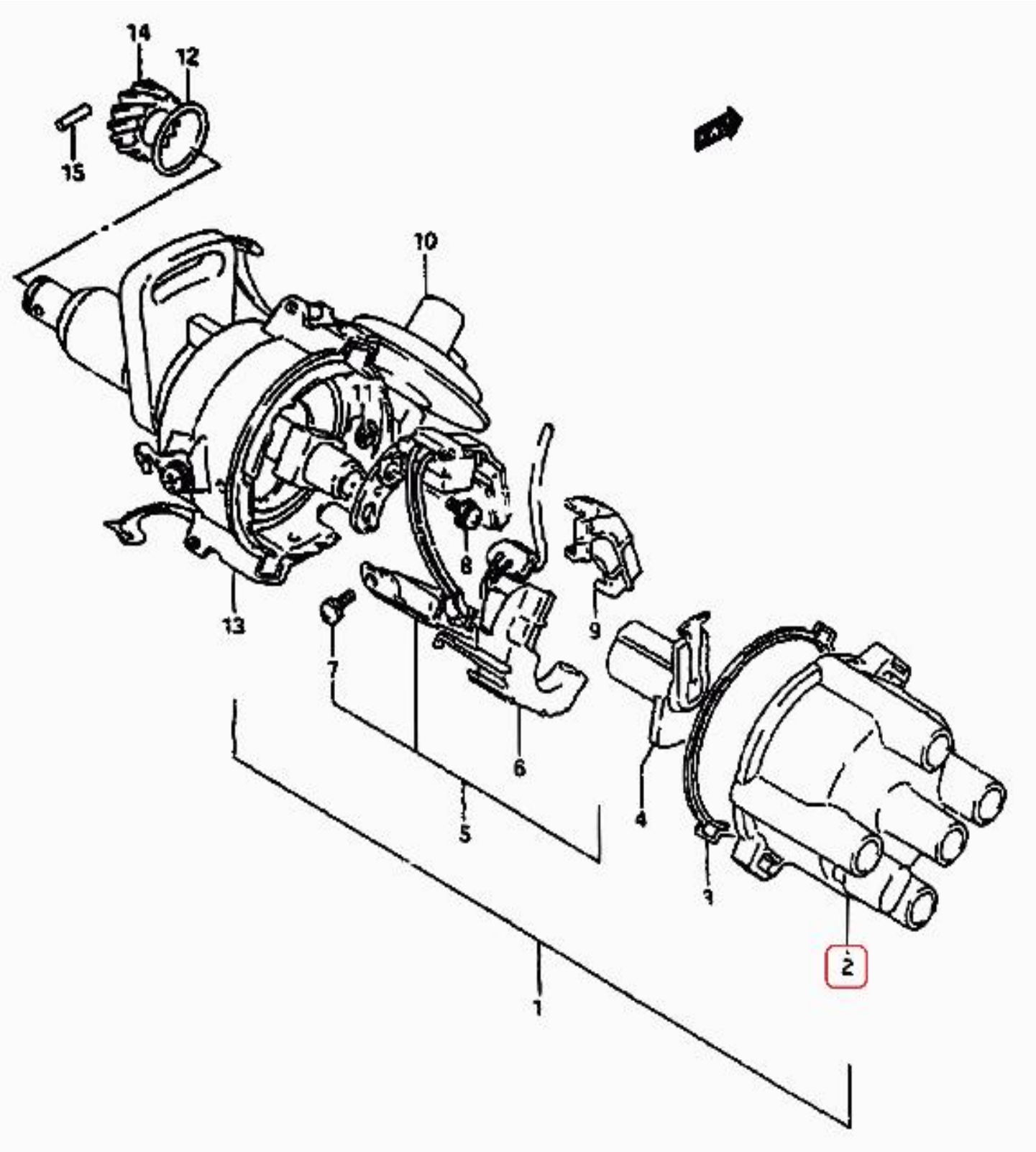
Samurai/SJ SJ413 SJ413V-6 (E24) TYPE 6
Vitara/Sidekick SE416 SE416 (E28:MY 1989) 89 MODEL
Samurai/SJ SJ413 SJ413 (E03,E33:MY 1987) 87 MODEL
Samurai/SJ SJ413 SJ413Q-6/SJ413V-6 (E01) TYPE 6
Vitara/Sidekick SE416 SE416 (E28:MY 1990) 90 MODEL
Vitara/Sidekick SE416 SE416 (E03,E33:MY 1989) 89 MODEL