CONCESIONARIO OFICIAL SANTANA

SANTANA - 35670-81A31 - C/ PILOTO INTERMITENTE L/I

Conjkunto intermitente lado izquierdo

LEFT TAIL LAMP ASSEMBLY
UNITÉ DE LAMPE, COMBINAISON ARRIÈRE GAUCHE
GRUPPO FANALE, COMBINAZIONE POSTERIORE SINISTRA
SCHEINWERFERGRUPPE, HINTEN LINKS KOMBINATION

Vehículo
Jimny SN413V-3 SN413V
Jimny SN415VD-6 SN415VD
Jimny SN413V-7 (E02,E05,E10,E11,E21,E22,E24,E37,E38,E42,E43,E54,E85,E90,E96) SN413V
Jimny SN415QD (SANTANA)
Jimny SN415VD-4 SN415VD
Jimny SN413V-7 (E06)
Jimny SN413V-5 SN413V
Jimny SN413V-6 (E02,E05,E10,E11,E21,E22,E24,E37,E38,E42,E43,E54,E85,E90,E96) SN413V
Jimny SN413V-4 SN413V
Jimny SN415VD-5 SN415VD
Jimny SN413V-8 (E02,E05,E10,E11,E21,E22,E24,E37,E38,E42,E43,E54,E85,E90,E96) SN413V
Jimny SN415VD-7 SN415VD
Jimny SN413Q (SANTANA)
Jimny SN413V-2 SN413V
Jimny SN413V-9 (E02,E05,E06,E21,E22,E24,E38,E42,E90) SN413V
Jimny SN413V-9 (E37) SN413V
Jimny SN413V-9 (E10,E85,E96) SN413V
Jimny SN413V-9 (E43) SN413V
Jimny SN413V-9 (E85) SN413V
Jimny
Jimny
Jimny

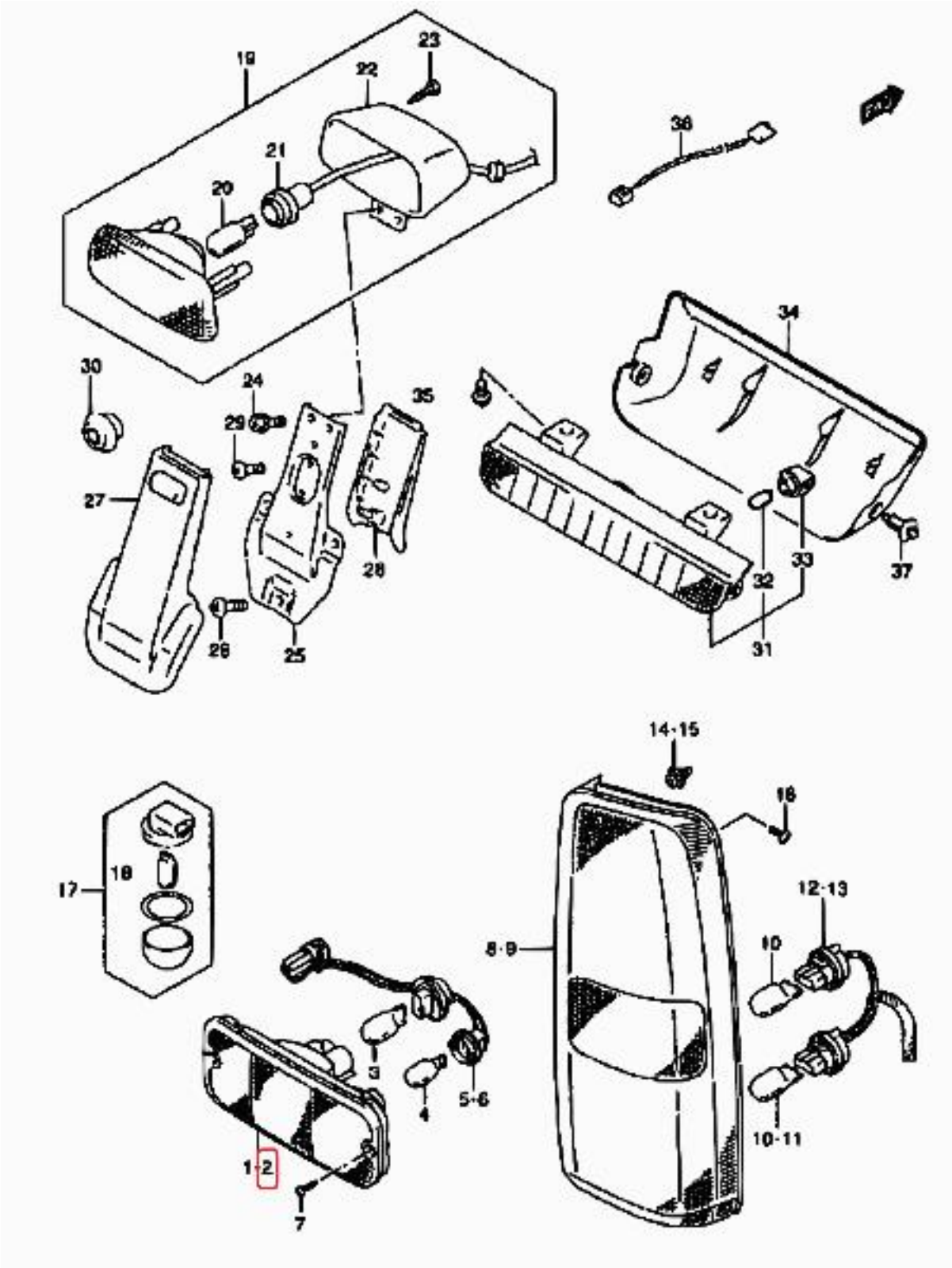
19
22
23
21
20
36
34
30
24
29
35
27
28
26
25
32
33
37
31
14·15
16
17
18
12·13
8·9
10
3
4
5·6
10·11
1·2
7