CONCESIONARIO OFICIAL SANTANA

SANTANA - 57820-77E00 - SOPORTE,RESORTE TRAS.IZQ.

Soporte resorte trasero lado izquierdo

BRACKET, RR COIL SPRING, L
SUPPORT, RESSORT HÉLICOÏDAL ARR, L

Vehículo Códigos de modelo Código de modelo Fecha del modelo desde spec
Vitara/Sidekick SE416 SE416 (E03,E33:MY 1993) 93 MODEL
Vitara/Sidekick SE416 SE416-5 TYPE 5
Vitara/Sidekick SE416 SE416 (3DR) TYPE 1
Vitara/Sidekick SE419 SE419D (Santana)
Vitara/Sidekick SV418 SV418 (MY 1997) 97 MODEL SV418
Vitara/Sidekick SE416 SE416 (E03,E33:MY 1995) 95 MODEL
Vitara/Sidekick SE416 SE416-4 TYPE 4
Vitara/Sidekick SV418 SV418 (MY 1996) 96 MODEL SV418
Vitara/Sidekick SV420 SV420D SV420D TYPE 1
Vitara/Sidekick SE416 SE416 (E03,E33:MY 1994) 94 MODEL
Vitara/Sidekick SE416 SE416-3 (5DR) TYPE 3
Vitara/Sidekick SE419 SE419TD (MY:97-98,Santana)
Vitara/Sidekick SV620 SV620 SV620 TYPE 1
Vitara/Sidekick SV620 SV620-3 SV620
Vitara/Sidekick SE416 SE416 (E24) TYPE 1
Vitara/Sidekick SE416 SE416-2 (E24) TYPE 2
Vitara/Sidekick SE416 SE416 (E03,E28,E33,E60:MY 1998) 98 MODEL SE416
Vitara/Sidekick SE416 SE416 (MY:97-98, Santana)
Vitara/Sidekick SE416 SE416-2 (5DR) TYPE 2
Vitara/Sidekick SE416 SE416 (E03,E28,E33,E60:MY 1997) 97 MODEL SE416
Vitara/Sidekick SE416 SE416 (E03,E28,E33,E60:MY 1996) 96 MODEL SE416
Vitara/Sidekick SE416 SE416 E-III (Santana)
Vitara/Sidekick SE416 SE416 (E03,E33:MY 1992) 92 MODEL
Vitara/Sidekick SE416 SE416 (MY:96, 3DR Santana) 3DR
Vitara/Sidekick SE416 SE416-3 (3DR) TYPE 3
Vitara/Sidekick SE419 SE419D (MY:96, 3DR Santana) 3DR
Vitara/Sidekick SE416 SE416 (E28:MY 1994) 94 MODEL
Vitara/Sidekick SV418 SV418 (MY 1998) 98 MODEL SV418
Vitara/Sidekick SE420 SE420 HDI 3DR (Santana) 3DR
X90 SZ416 SZ416 (E30,E28,E33:MY 1998) 98 MODEL
Vitara/Sidekick SE416 SE416 (E28:MY 1995) 95 MODEL
Vitara/Sidekick SE416 SE416 (E28:MY 1992) 92 MODEL

X90 SZ416 SZ416 (E01,E02,E22,E24,E43)
Vitara/Sidekick SE416 SE416-2 (3DR) TYPE 2
Vitara/Sidekick SE416 SE416-3 (E24) TYPE 3
Vitara/Sidekick SE416 SE416 (E28:MY 1993) 93 MODEL
Vitara/Sidekick SV620 SV620-2 SV620 TYPE 2
Vitara/Sidekick SV420 SV420D-3 SV420D
Vitara/Sidekick SV420 SV420G-3 SV420G
Vitara/Sidekick SV420 SV420D-2 SV420D TYPE 2
X90 SZ416 SZ416 (E30,E28,E33:MY 1996) 96 MODEL
X90 SZ416 SZ416 (E30,E28,E33:MY 1997) 97 MODEL

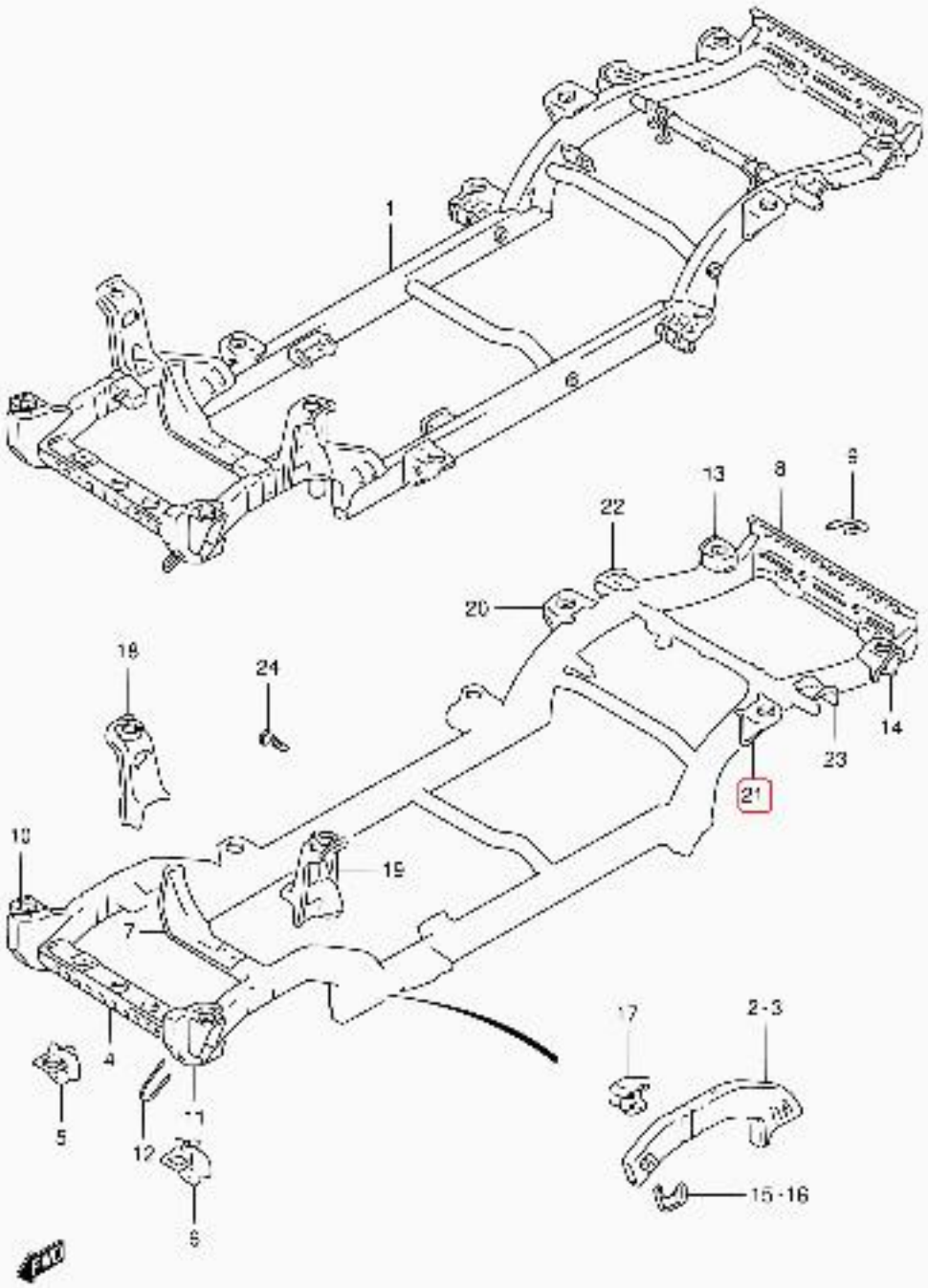

SV620 3 E01_178
CHASSIS FRAME