CONCESIONARIO OFICIAL SANTANA

SANTANA - 84623-61A00-5PK - MOLDURA VENTANA TRASERA

Moldura ventana trasera

MOLDING, WINDOW NO.3 (BLACK)
MOULURE, FENÊTRE NO.3 (NOIRE)

Vehículo
Vitara/Sidekick SE416 (E03,E33:MY 1991) 91 MODEL
Vitara/Sidekick SE416 (E03,E33:MY 1993) 93 MODEL
Vitara/Sidekick SE416 (3DR)
Vitara/Sidekick SV418 (MY 1997) SV418 97 MODEL
Vitara/Sidekick SE416 (E03,E33:MY 1995) 95 MODEL
Vitara/Sidekick SV418 (MY 1996) SV418 96 MODEL
Vitara/Sidekick SE416 (E03,E33:MY 1994) 94 MODEL
Vitara/Sidekick SE416 (E24)
Vitara/Sidekick SE416-2 (E24)
Vitara/Sidekick SE416 (E03,E28,E33,E60:MY 1998) SE416 98 MODEL
Vitara/Sidekick SE416 (E03,E28,E33,E60:MY 1997) SE416 97 MODEL
Vitara/Sidekick SE416-2 (Santana)
Vitara/Sidekick SE416 (E03,E28,E33,E60:MY 1996) SE416 96 MODEL
Vitara/Sidekick SE416 (E03,E33:MY 1992) 92 MODEL
Vitara/Sidekick SE416-3 (3DR)
Vitara/Sidekick SE416 (E28:MY 1994) 94 MODEL
Vitara/Sidekick SV418 (MY 1998) SV418 98 MODEL
Vitara/Sidekick SE416-3 (Santana)
Vitara/Sidekick SE416 (E28:MY 1995) 95 MODEL
Vitara/Sidekick SE416 (E28:MY 1992) 92 MODEL
Vitara/Sidekick SE416 (Santana)
Vitara/Sidekick SE416-2 (3DR)
Vitara/Sidekick SE416-3 (E24)
Vitara/Sidekick SE416 (E28:MY 1989) 89 MODEL
Vitara/Sidekick SE416 (E28:MY 1991) 91 MODEL
Vitara/Sidekick SE416 (E28:MY 1993) 93 MODEL
Vitara/Sidekick SE416 (E28:MY 1990) 90 MODEL
Vitara/Sidekick SE416 (E03,E33:MY 1989) 89 MODEL
Vitara/Sidekick SE416 (E03,E33:MY 1990) 90 MODEL
Escudo

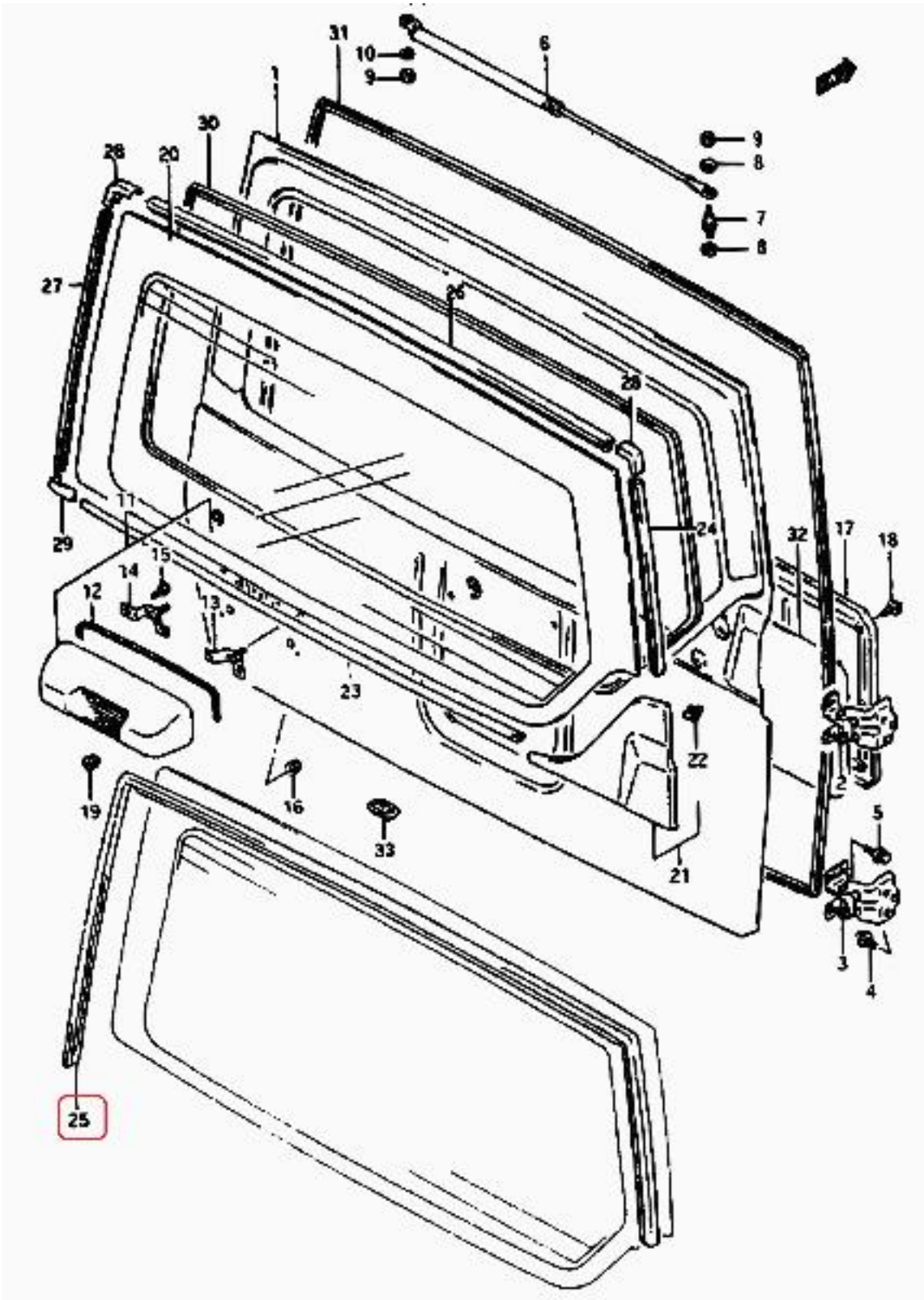
31
10
9
6
1
30
28
20
9
8
7
8
27
26
28
11
24
29
32
17
18
15
14
12
13
23
22
2
19
16
33
21
5
3
4
25