SANTANA - 84655-62B10 - PERFIL GOMA PTAS.L/I SF413

Perfil goma puerta lado izquierdo

Vehículo Códigos de modelo Código de modelo
Swift SF413 SF413 (E03,E33:MY 1994) 94 MODEL
Swift SF413 SF413 (E33:MY 1992) 92 MODEL
Swift SF416 SF416-4 (Magyar) SF416
Swift SF310 SF310-2 (E01) TYPE 2
Swift SF413 SF413 (E01) TYPE 1
Swift SF413 SF413 (Magyar) (E02,E15,E18,E19,E22,E30) SF413
Swift SF413 SF413-2 (Magyar) (E02,E15,E22,E30,E54) SF413
Swift SF413 SF413-4 (Magyar) SF413
Swift SF413 SF413 (E03,E33:MY 1990) 90 MODEL
Swift SF413 SF413 (E24) TYPE 1
Swift SF413 SF413 (E28:MY 1994) 94 MODEL
Swift SF413 SF413 (E33:MY 1993) 93 MODEL
Swift SF416 SF416-3 (Magyar) SF416
Swift SF310 SF310-3 (Magyar) (E02,E15,E22) SF310
Swift SF413 SF413 (E33:MY 1990) 90 MODEL
Swift SF413 SF413 (E28:MY 1993) 93 MODEL
Swift SF413 SF413 (Magyar) (E66) SF413
Swift SF413 SF413-2 (E24) TYPE 2
Swift SF413 SF413-3 (Magyar) (E02,E15,E22) SF413
Swift SF310 SF310-2 (Magyar) (E02,E15,E22,E30,E54) SF310
Swift SF310 SF310-4 (Magyar) SF310
Swift SF413 SF413-3 (Magyar) (E54)
Swift SF413 SF413 (E03,E33:MY 1991) 91 MODEL
Swift SF416 SF416-2 (Magyar) SF416
Swift SF310 SF310-3 (Magyar) (E66) SF310
Swift SF413 SF413-3 (Magyar) (E66) SF413
Swift SF310 SF310 (Magyar) (E66) SF310
Swift SF413 SF413 (E28:MY 1989) 89 MODEL
Swift SF413 SF413 (E28:MY 1991) 91 MODEL
Swift SF413 SF413-2 (E01) TYPE 2
Swift SF413 SF413 (E03,E33:MY 1989) 89 MODEL
Swift SF413 SF413-2 (Magyar) (E66) SF413
Swift SF413 SF413 (E33:MY 1991) 91 MODEL
Swift SF310 SF310-2 (Magyar) (E66) SF310
Swift SF413 SF413 (E28:MY 1990) 90 MODEL
Swift SF413 SF413 (E28:MY 1992) 92 MODEL
Swift SF413 SF413 (E33:MY 1989) 89 MODEL
Swift SF413 SF413 (E33:MY 1994) 94 MODEL
Swift SF416 SF416 (Magyar) SF416
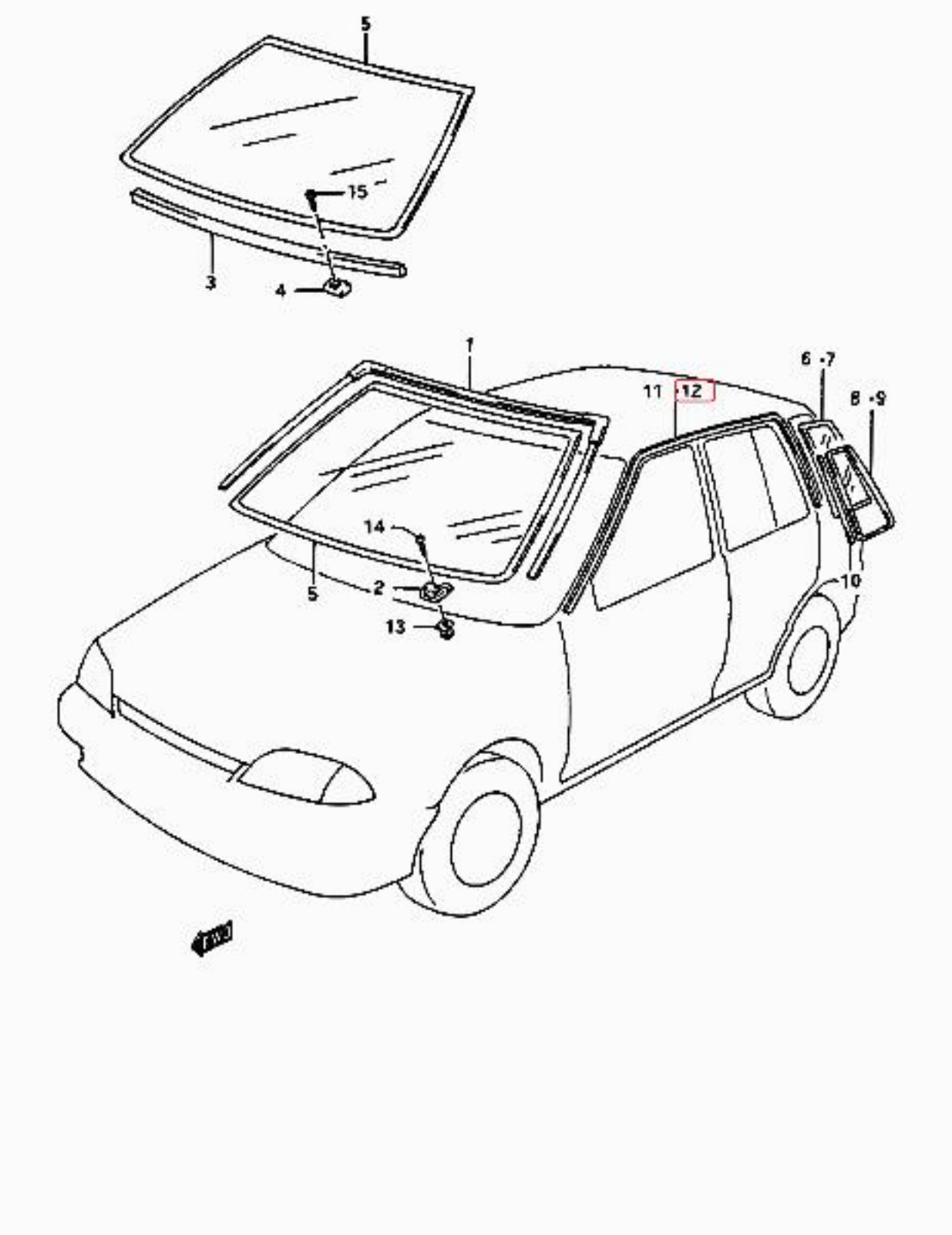
Swift SF310 SF310 (E01) TYPE 1
Swift SF310 SF310 (Magyar) (E02,E15,E18,E19,E22,E30) SF310
Swift SF413 SF413 (E03,E33:MY 1992) 92 MODEL
Swift SF413 SF413 (E03,E33:MY 1993) 93 MODEL