CONCESIONARIO OFICIAL SANTANA

LAND ROVER - 569126 - C/CILINDRO PRINCIPAL BOMBA EMBRAGE (PEDAL)

Cilindro principal bomba embrague

MASTER CYLINDER
MAITRE CYLINDRE
CILINDRO PRINCIPALE
HAUPTBREMSZYLINDER

Vehículos compatibles: Motor Año
SERIES III (SANTANA) CAZORLA 3.5 DIESEL
SERIES III (SANTANA) SERIES III 2.25 DIESEL 1971 - 1980
SERIES III (SANTANA) SERIES III 2.25 GASOLINA 1971 - 1980
SERIES III (SANTANA) SERIES III 2.5 DIESEL
SERIES III (SANTANA) SERIES III 2.6 6 CYL GASOLINA 1971 - 1980
SERIES III (SANTANA) SERIES III 3.5 V8 PETROL 1971 - 1980
SERIES II 2.0 L GASOLINA II Y IIA
SERIES II 2.0 L I4 DIESEL II Y IIA
SERIES II 2.25 L DIESEL
SERIES II 2.25 L GASOLINA II Y IIA

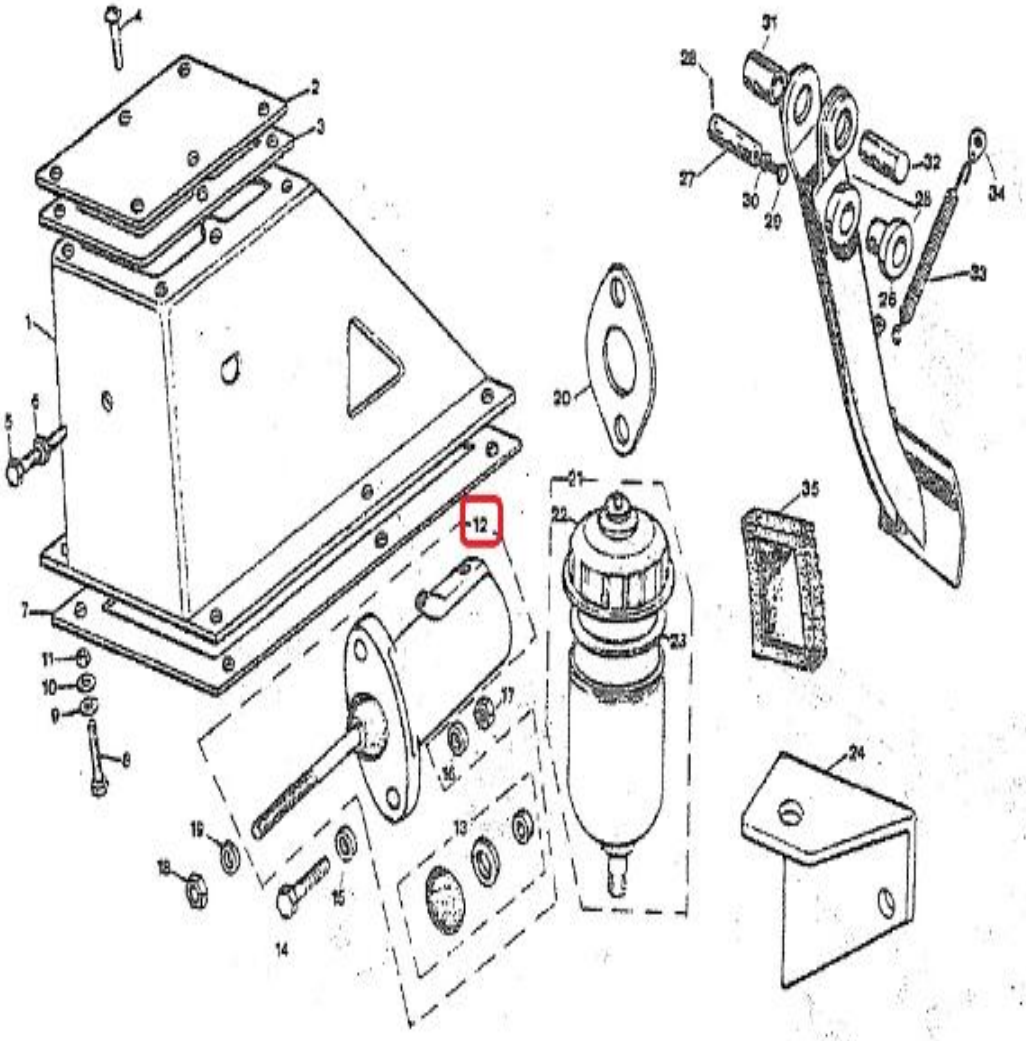
4
2
3
1
5
6
7
11
10
9
8
12
17
16
13
19
18
15
14
20
21
22
23
24
35
31
28
27
30
29
32
25
26
33
34